NBL9027, Flat brushless DC Motor,90Watt

Motor Data			1006002702	1006002712	1006002715				
Values at nominal voltage									
1	Nominal voltage	U_N	24	48	24				V
2	No load speed	n_0	3190	2080	2000				rpm
3	No load current	I_0	610	195	350				mA
4	Stall torque	M_H	4984.1	4553.8	5208.9				mNm
5	Stall current	M_I	70.6	21.1	46.2				A
6	Max. efficiency	η_{max}	83	85	83				%
7	Nominal power	W_N	111.4	86.0	59.2				W
8	Nominal speed	n_N	2620	1664	1600				rpm
9	Nominal torque (max.continuous torque)	M_N	425	517	370				mNm
10	Nominal current (max.continuous current)	I_N	5.84	2.21	3.2				A
Characteristics									
11	Terminal resistance phase to phase	R	0.34	2.28	0.52				Ω
12	Terminal inductance phase to phase	L	0.23	0.21	0.56				mH
13	Back-EMF constant	K_E	7.46	22.86	11.91				mV/rpm
14	Torque constant	K_M	71.22	218.33	113.72				mNm/A
15	Speed constant	K_n	134	44	84				rpm/V
16	Current constant	K_I	0.014	0.005	0.009				A/mNm
17	Speed / torque gradient	$\Delta n/\Delta M$	0.64	0.46	0.38				rpm/mNm
18	Mechanical time constant	τ_m	43.4	42.6	39.8				ms
19	Rotor inertia	J	3060.0	3060.0	3060.0				gcm²
Specifications									
20	Operating temperature range:								
	-Motor				-20……+100				℃
	-winding, max permissible				+125				℃
21	Direction of rotation				electronically reversible				
22	Max. speed	n_{max}			5000				rpm
23	Number of pole pairs				12				
24	Number of phases				3				
25	Magnet material				NdFeB				
26	Hall sensors				digital				
Mechanical data									
27	Bearing type				ball bearings, preloaded				
28	Axial play				0 - 0.3				mm
29	Max. axial load (dynamic)				12				N
30	Max. force for press fits (static)				183				N
	(static, shaft supported)				8000				N
31	Max. radial loading, 7.5mm from flange				60				N
Product									
32	Weight of motor		600	600	600				g

Dimensional drawing

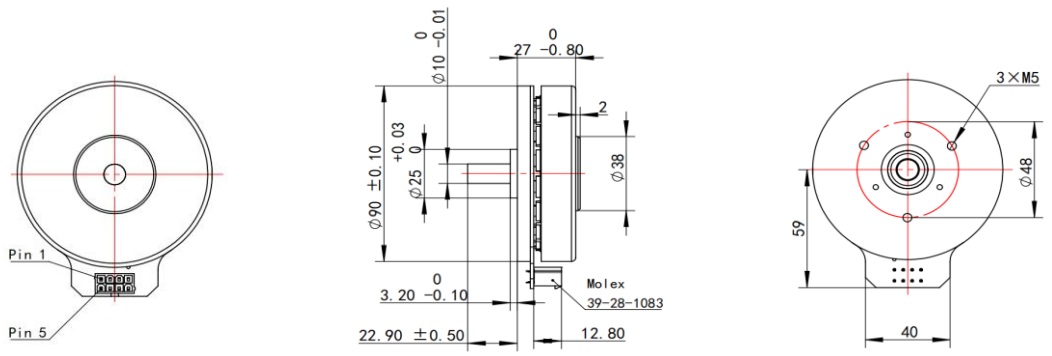

Option, cable and connection information

Connecttor Molex 39-28-1083

Hall sensors A	Pin 1	Hall sensors C	Pin 5
Hall sensors B	Pin 2	GND	Pin 6
V_{hall} 4.5V……24V	Pin 3	Motor winding A	Pin 7
Motor winding C	Pin 4	Motor winding B	Pin 8

Note:About the torque curves,please contact us for more information.